Lantern Ornament (Red Present)

A LEGO® project by Chris McVeigh

chrismcveigh.com

	Element ID	Color	Description	Quantity
	6010831	Black	Round Plate 2X2 W/Eye	1
	4211502	Medium Stone Grey	Motor 1X2X2/3	8
	4211508	Medium Stone Grey	T-Piece	2
	302321	Bright Red	Plate 1X2	8
	6075074	Bright Red	End Ridged Tile 1X2/45°	8
	307021	Bright Red	Flat Tile 1X1	4
	306921	Bright Red	Flat Tile 1X2	8
	306821	Bright Red	Flat Tile 2X2	4
	302201	White	Plate 2X2	1
	302001	White	Plate 2X4	4
	303401	White	Plate 2X8	2
	614101	White	Plate 1X1 Round	4
	403201	White	Plate 2X2 Round	4
	4658973	White	Roof Tile 4X4/45° Inv.	4
	307001	White	Flat Tile 1X1	8
	306901	White	Flat Tile 1X2	8
	306801	White	Flat Tile 2X2	1

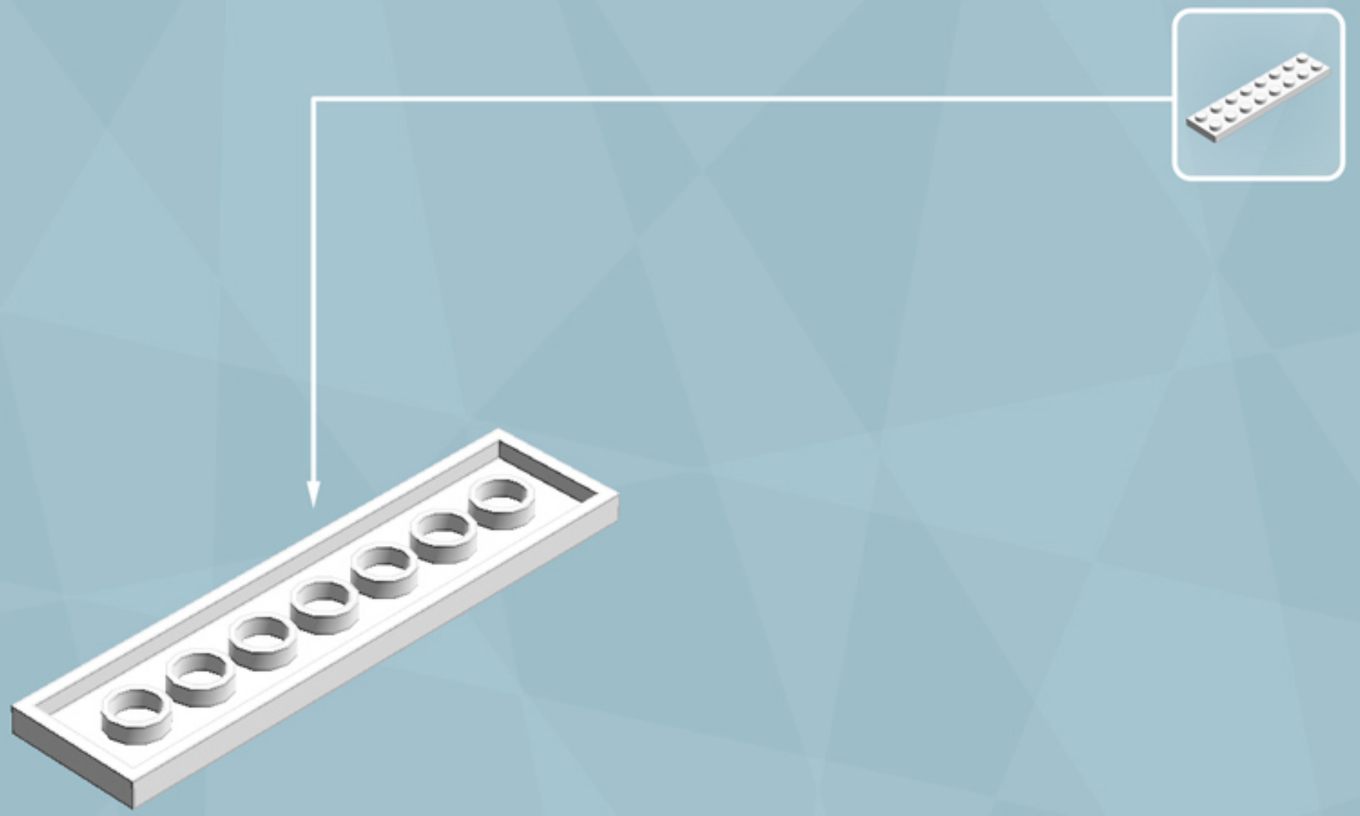

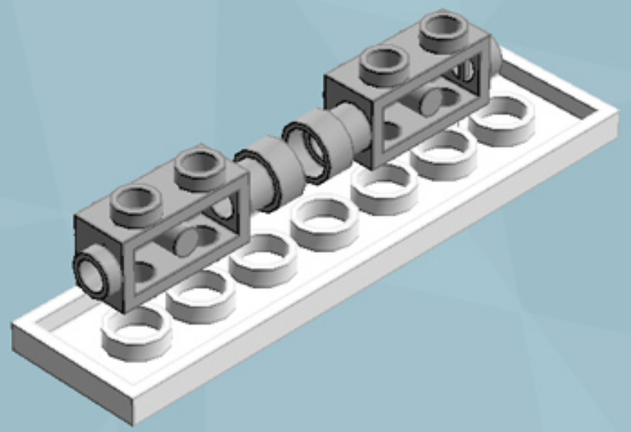

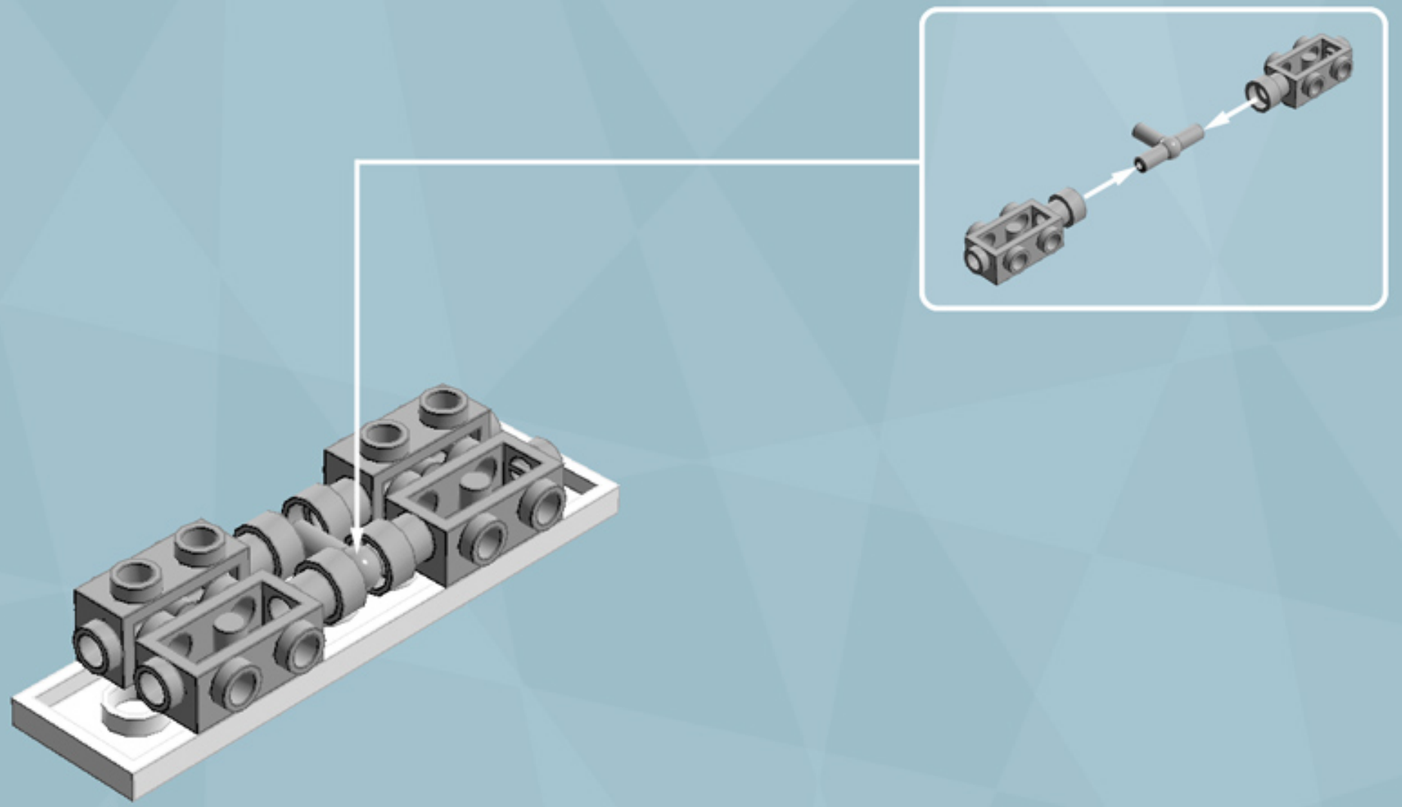

2x

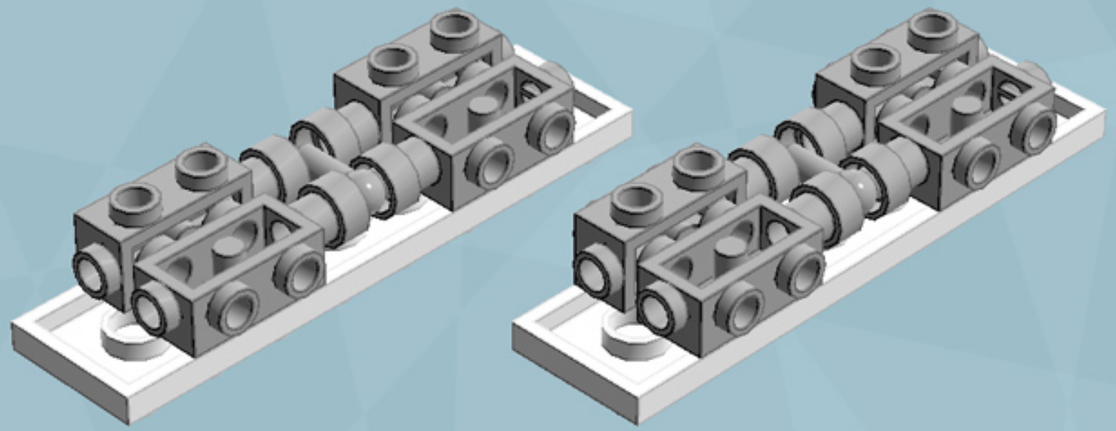

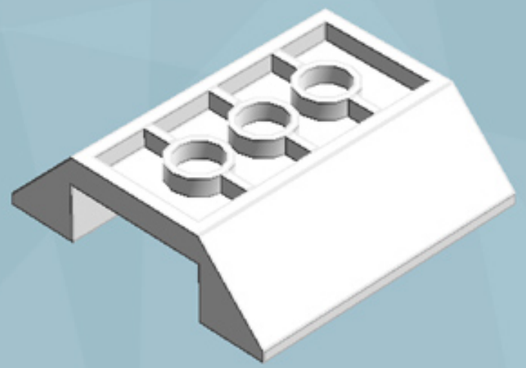

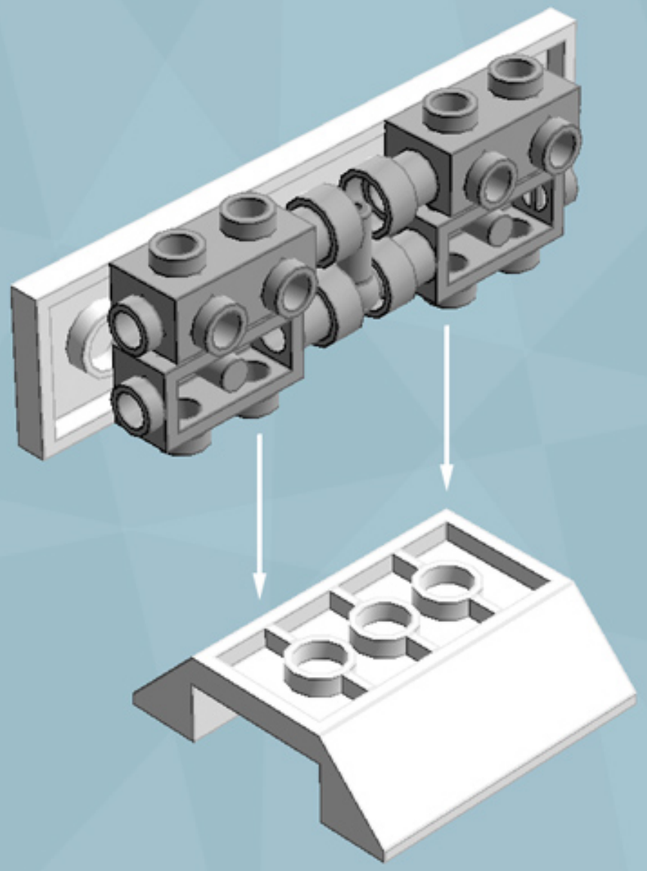

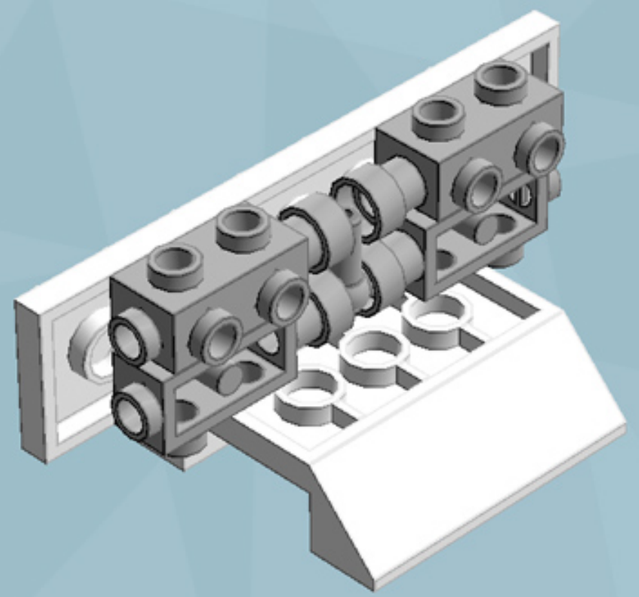

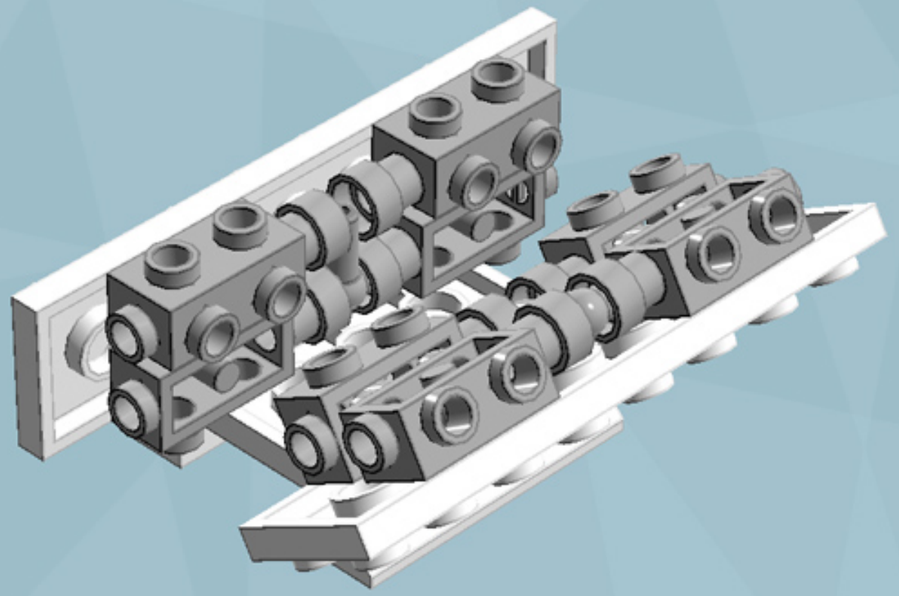

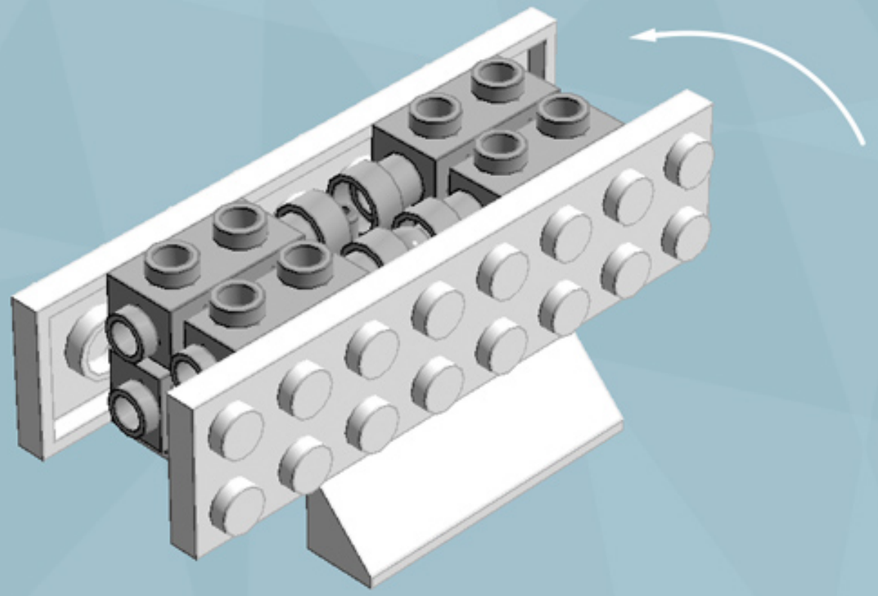

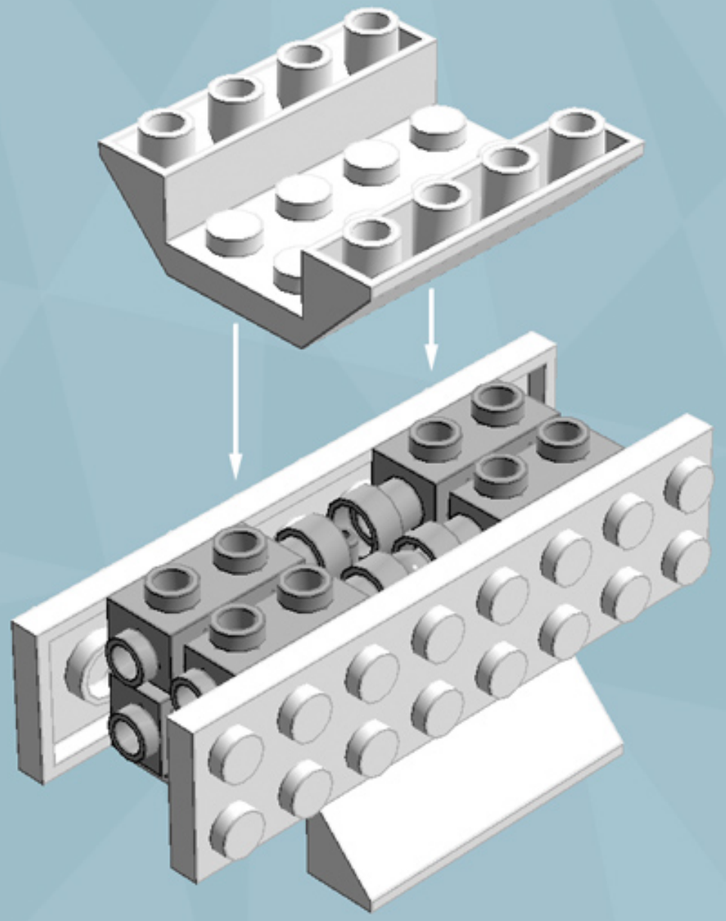

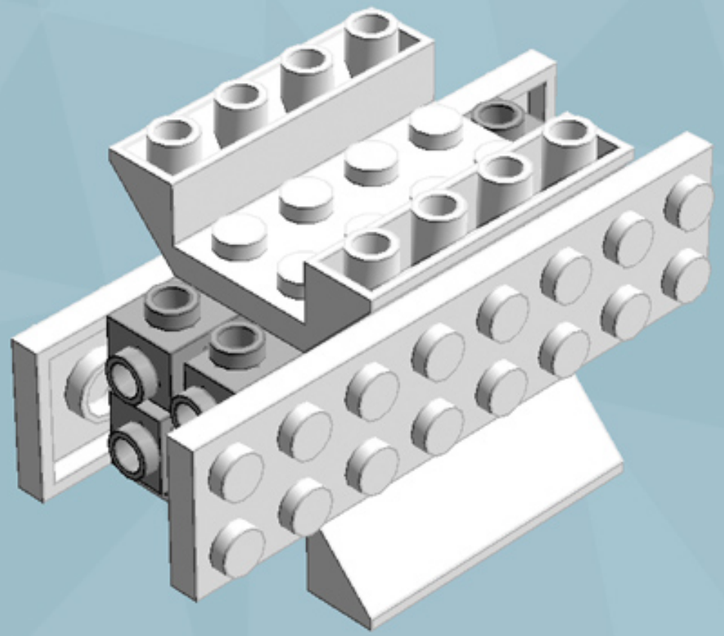

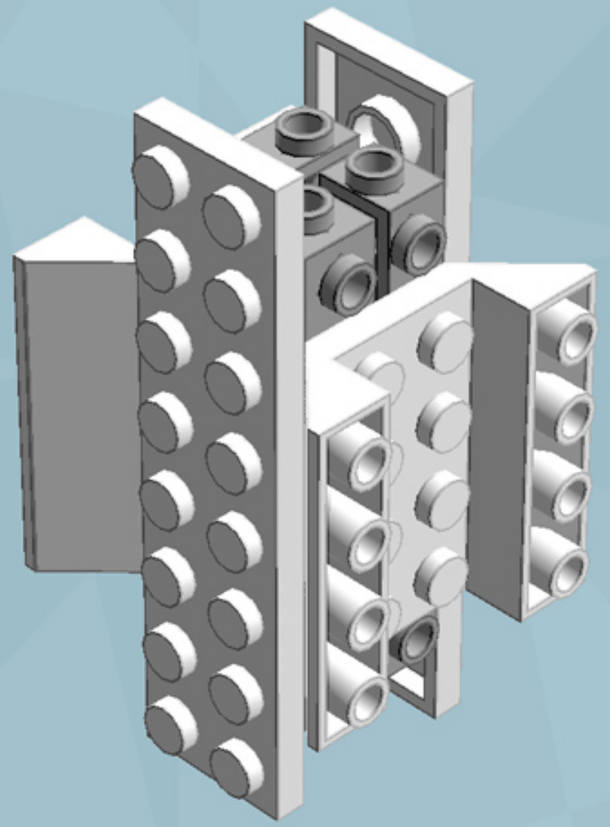

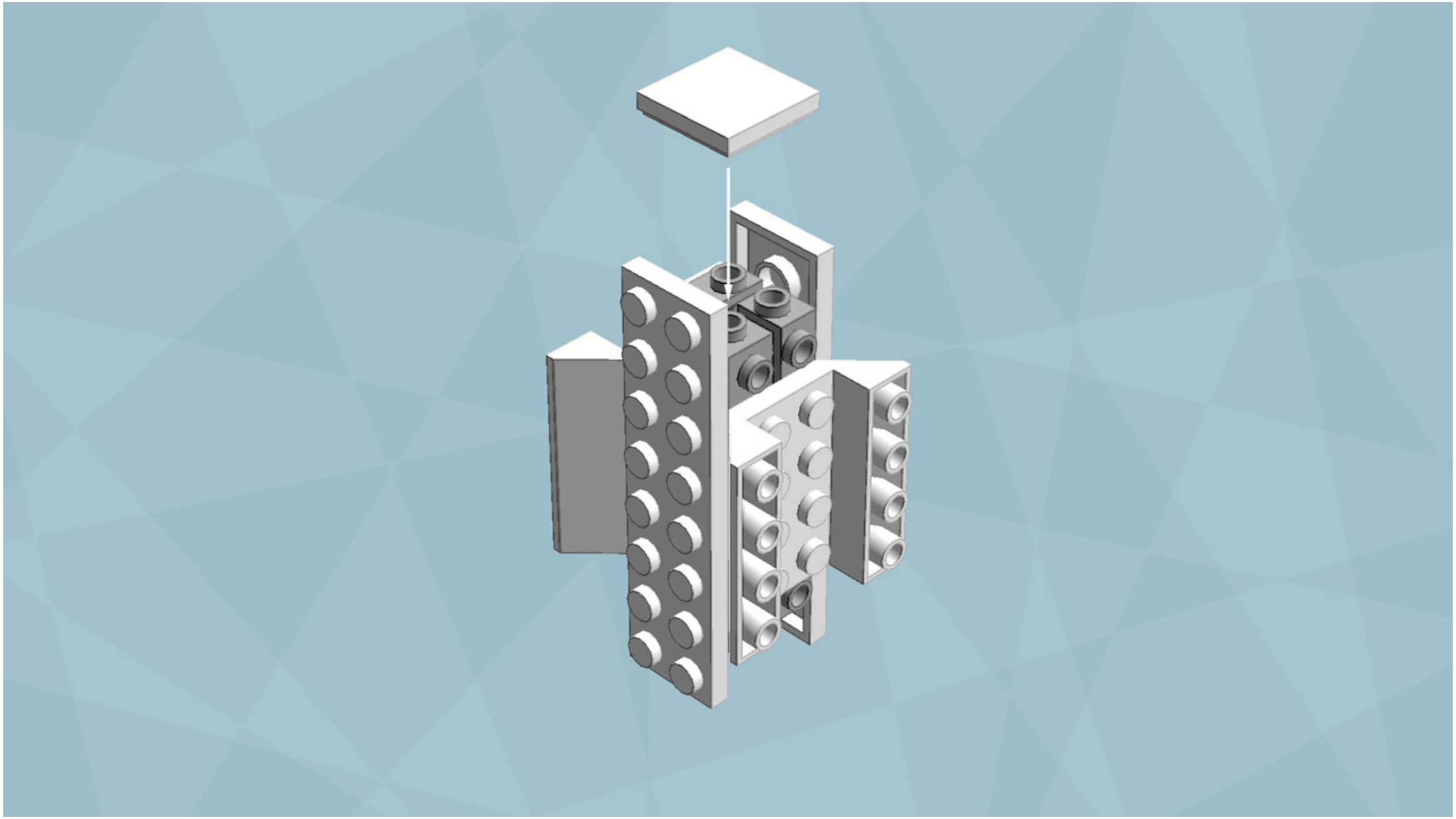

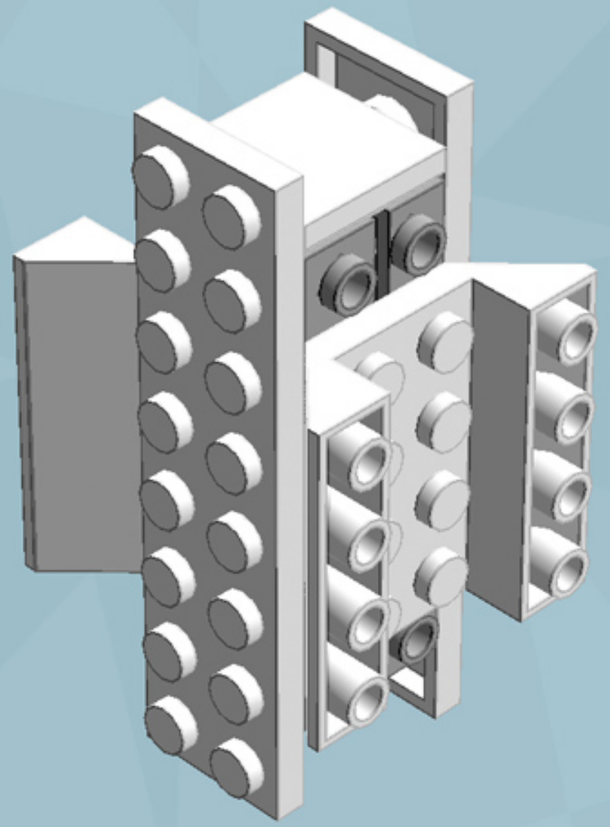

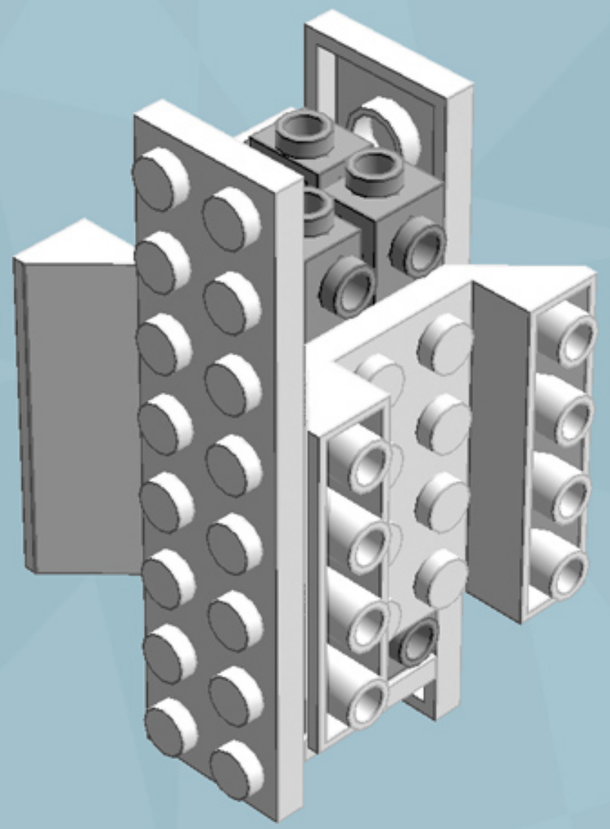

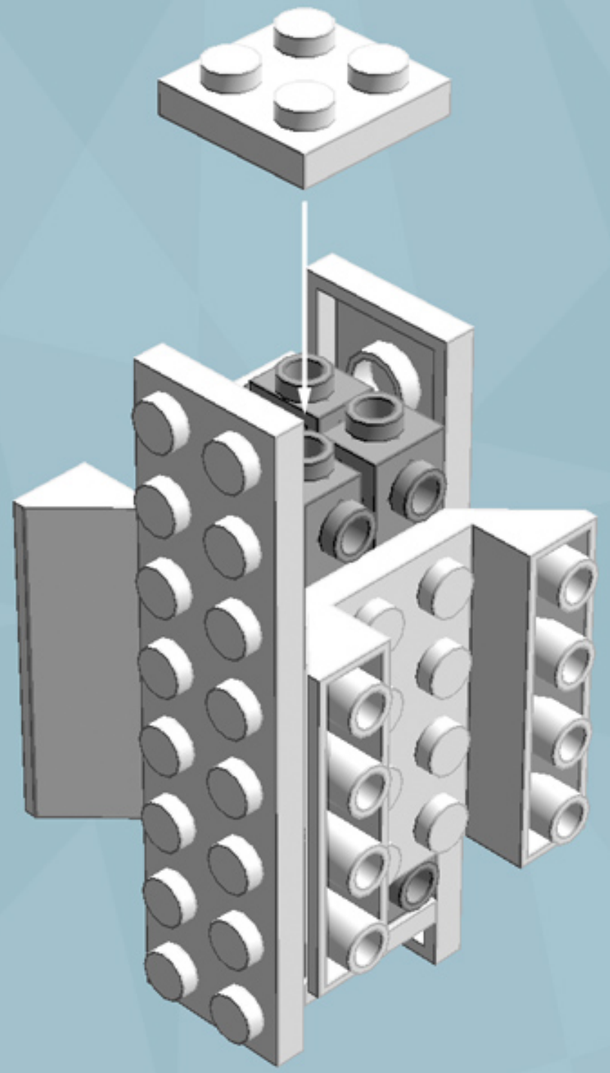

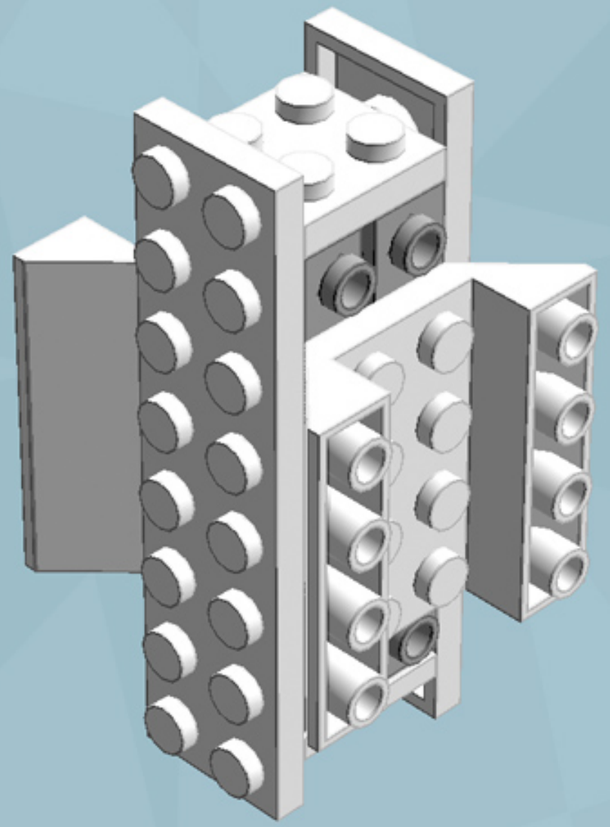

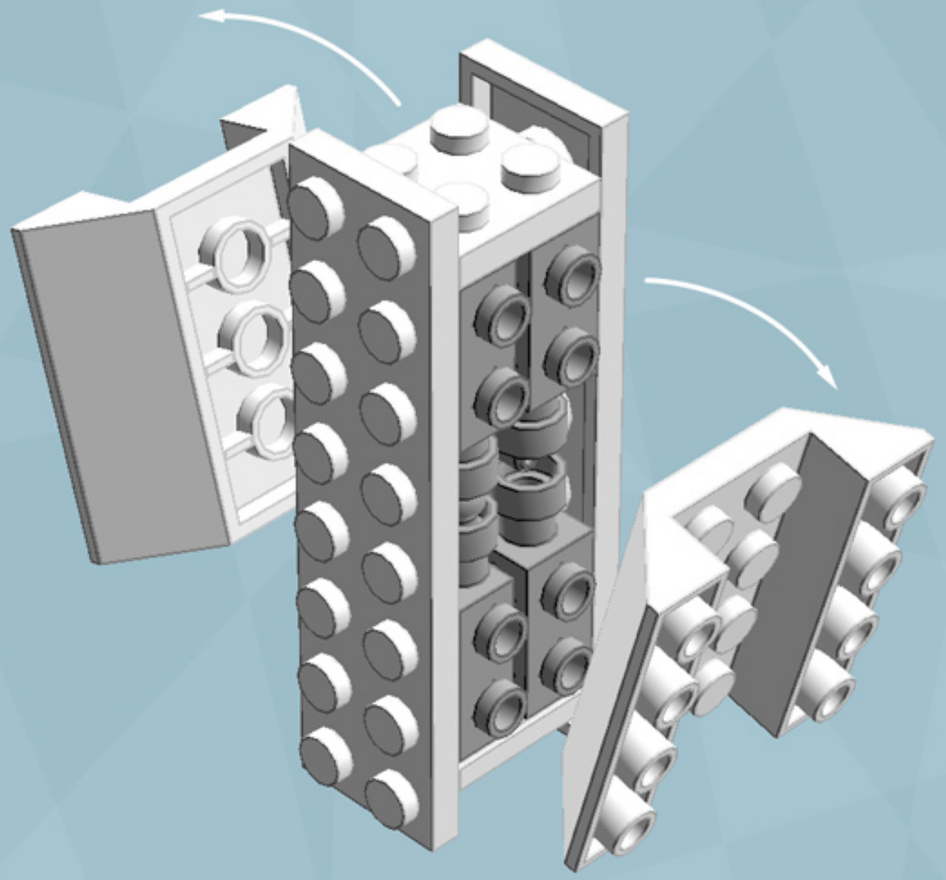

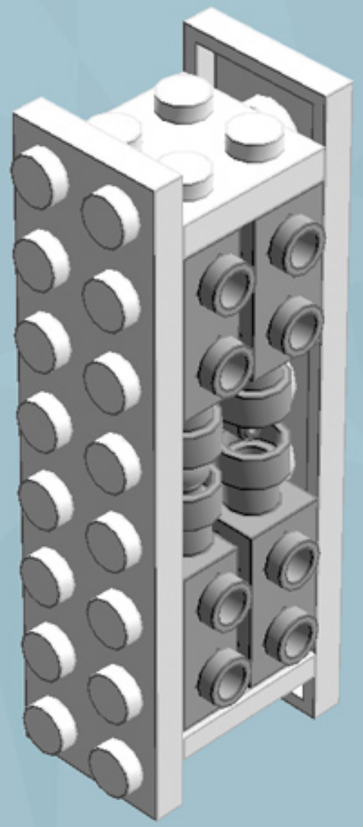

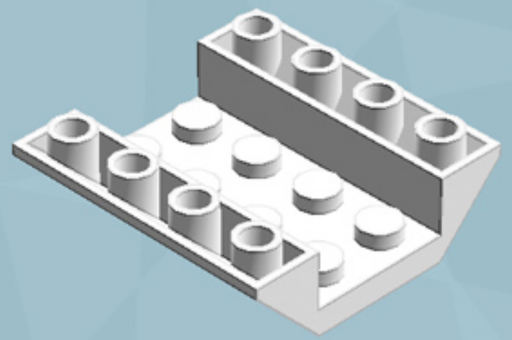

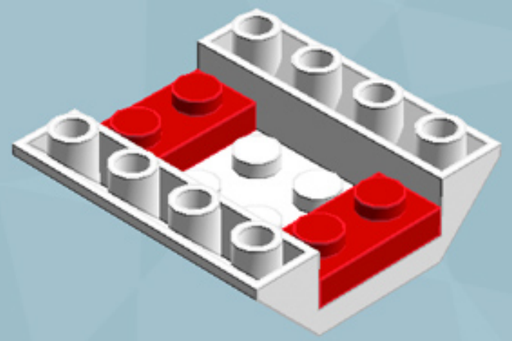

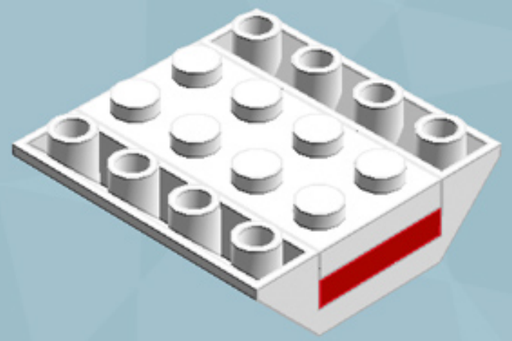

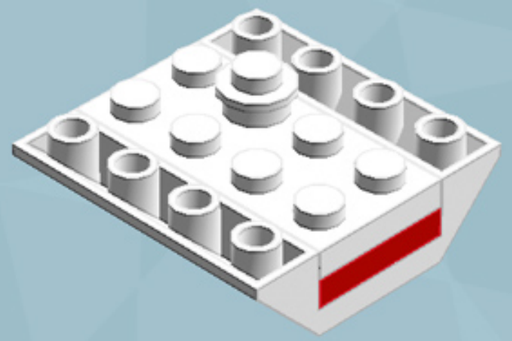

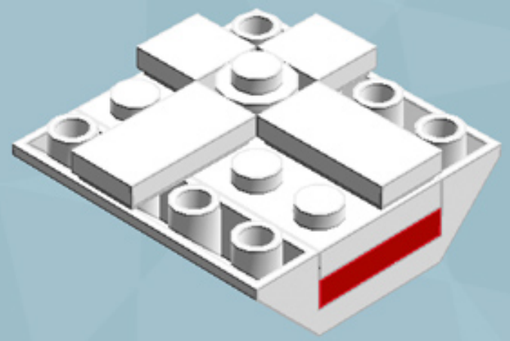

4x

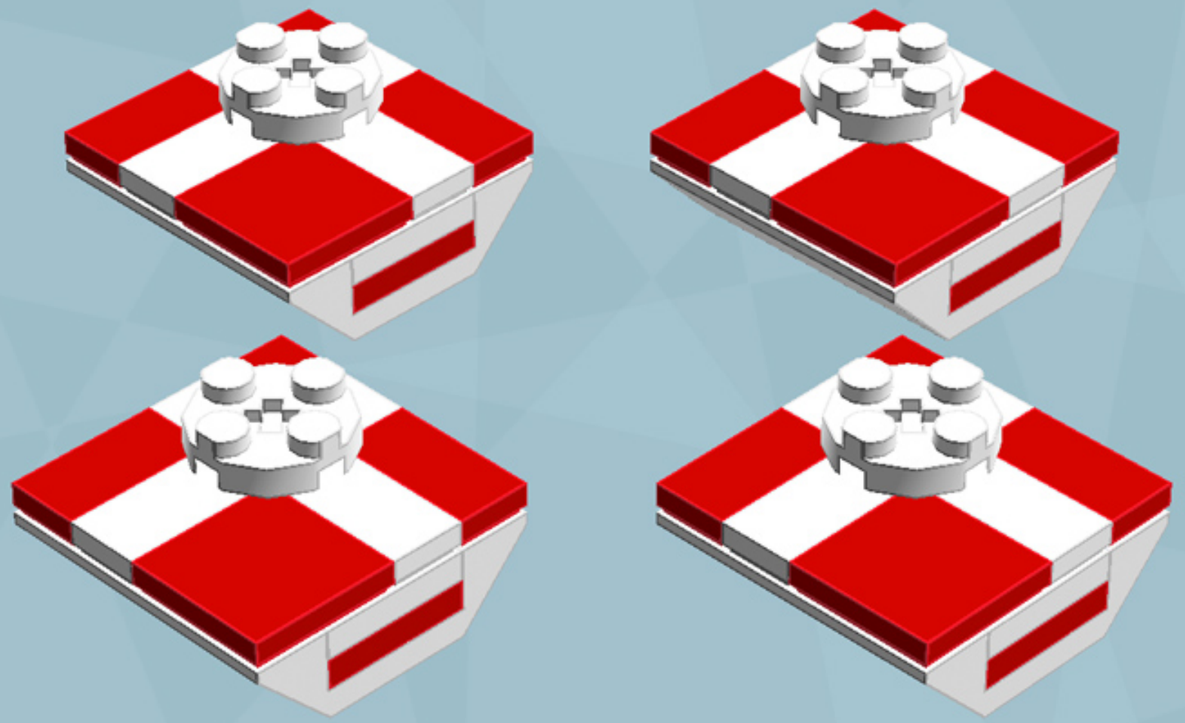

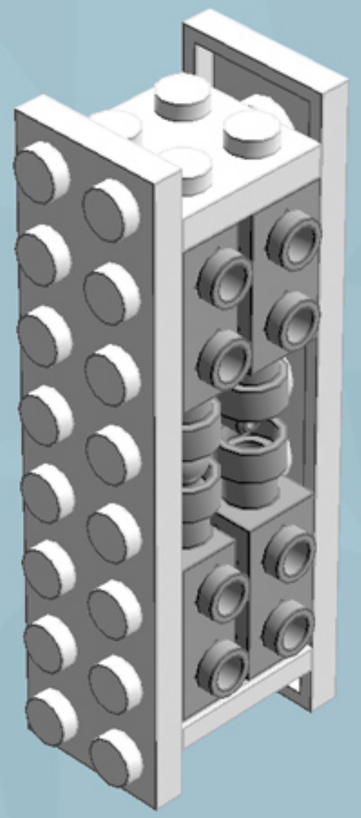

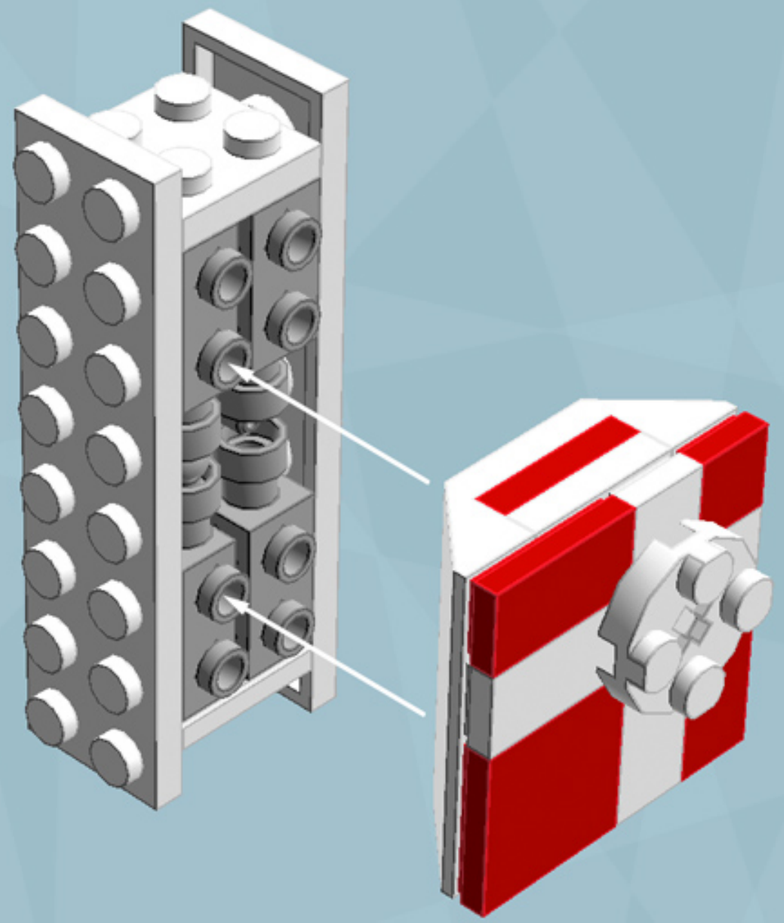

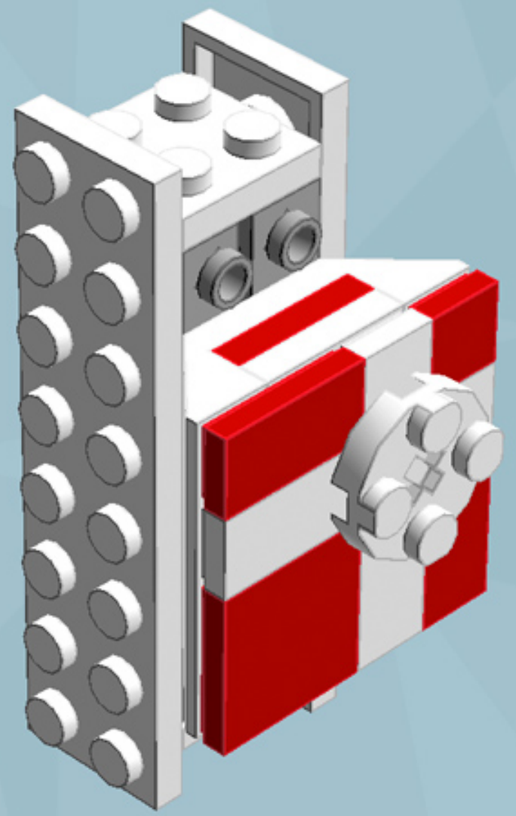

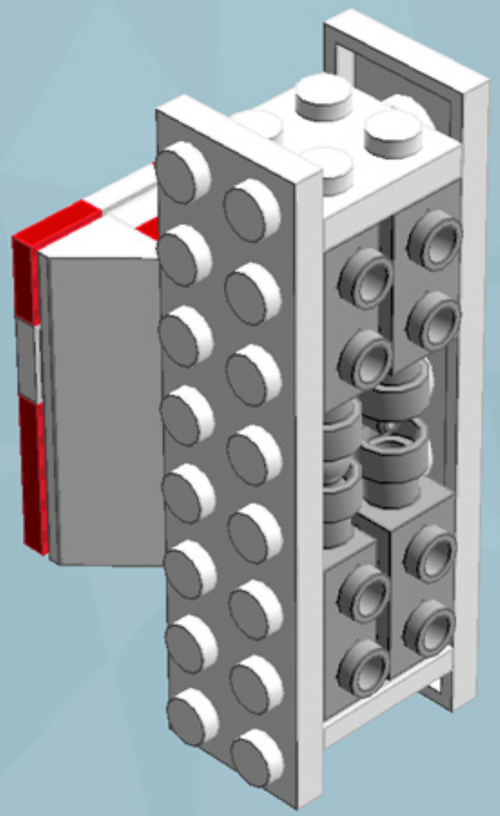

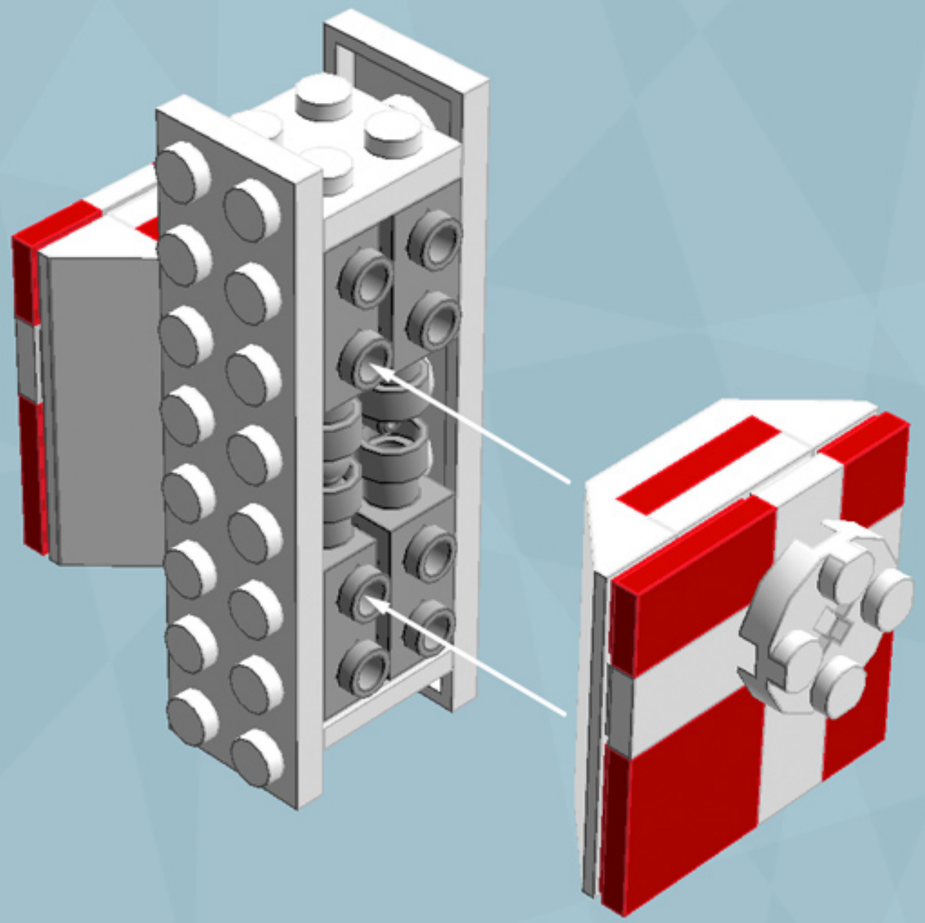

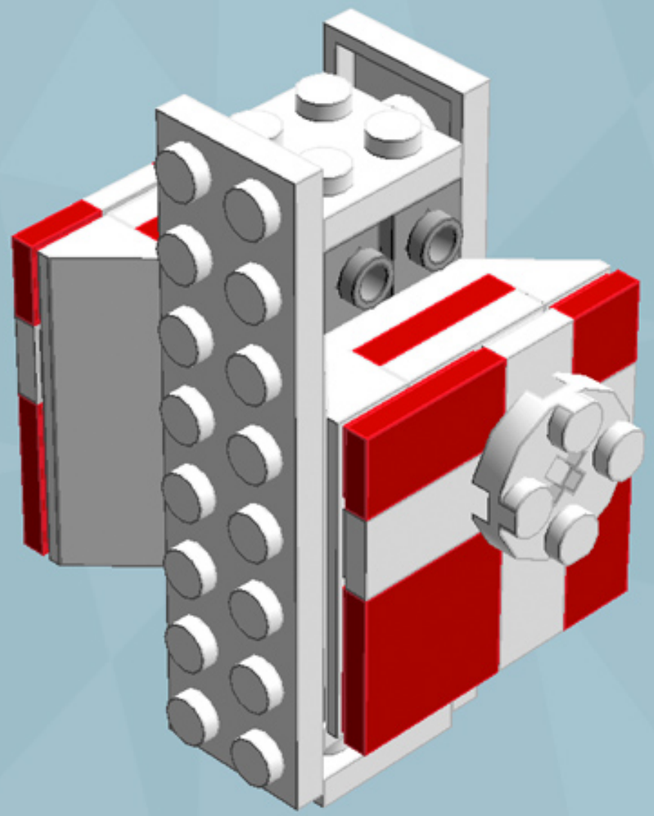

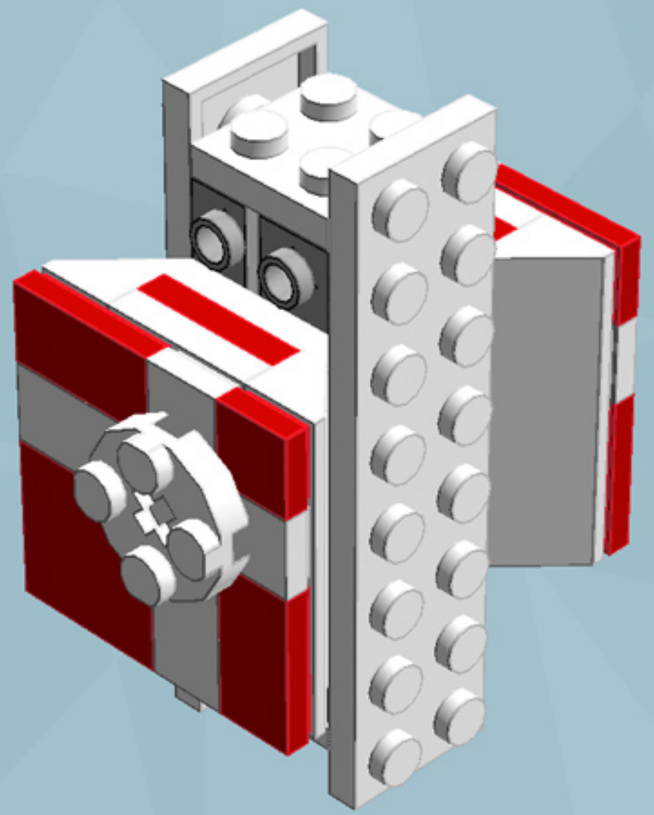

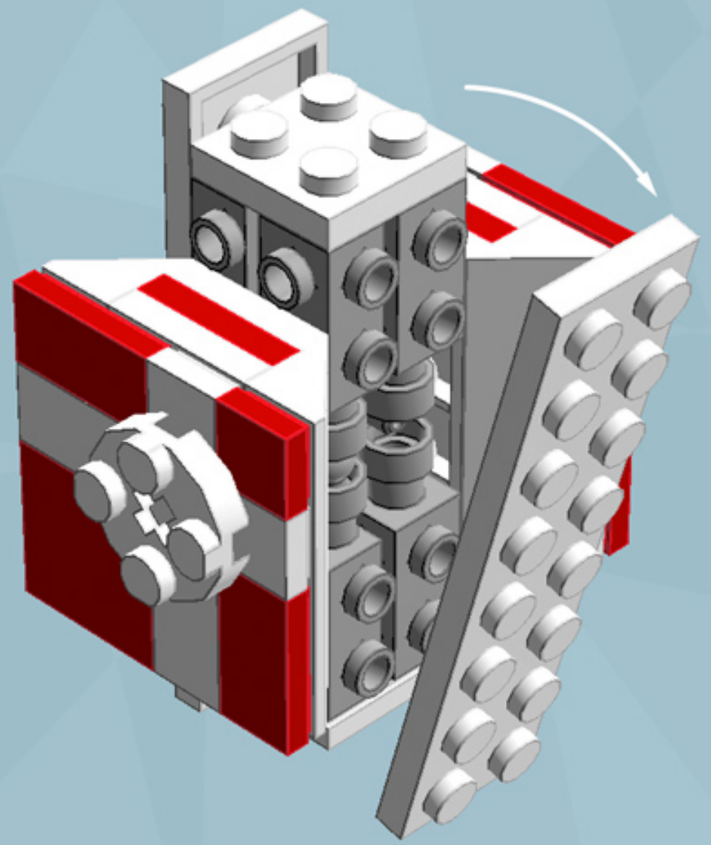

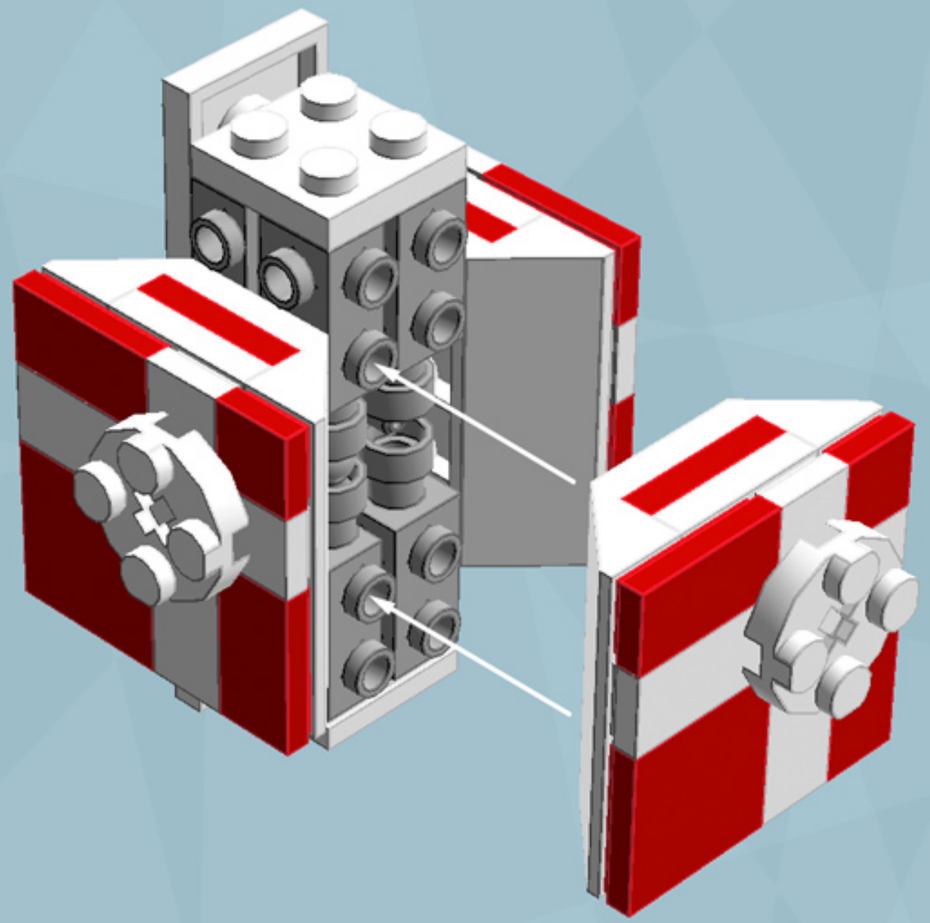

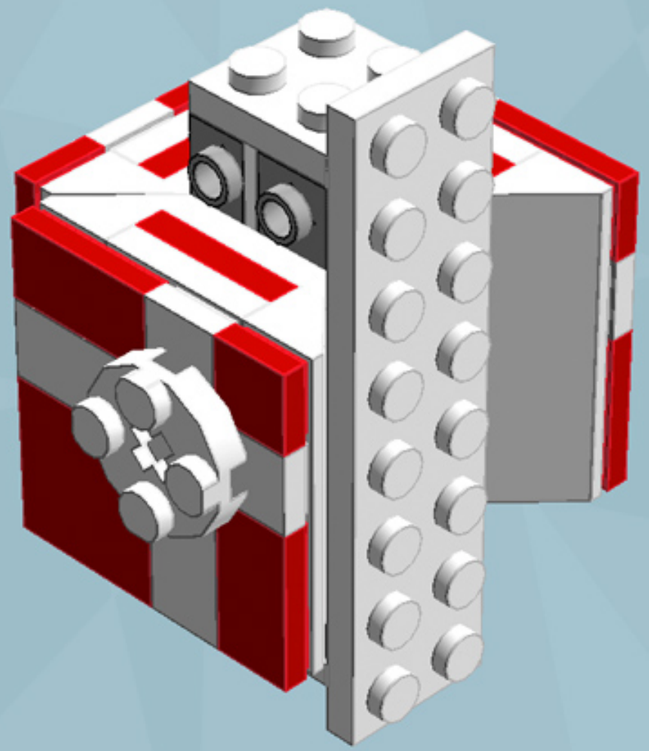

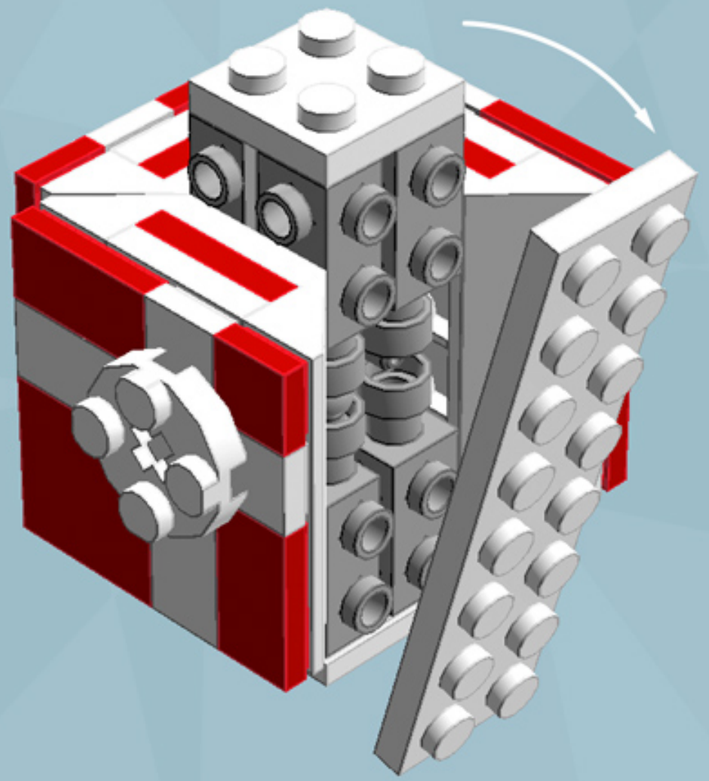

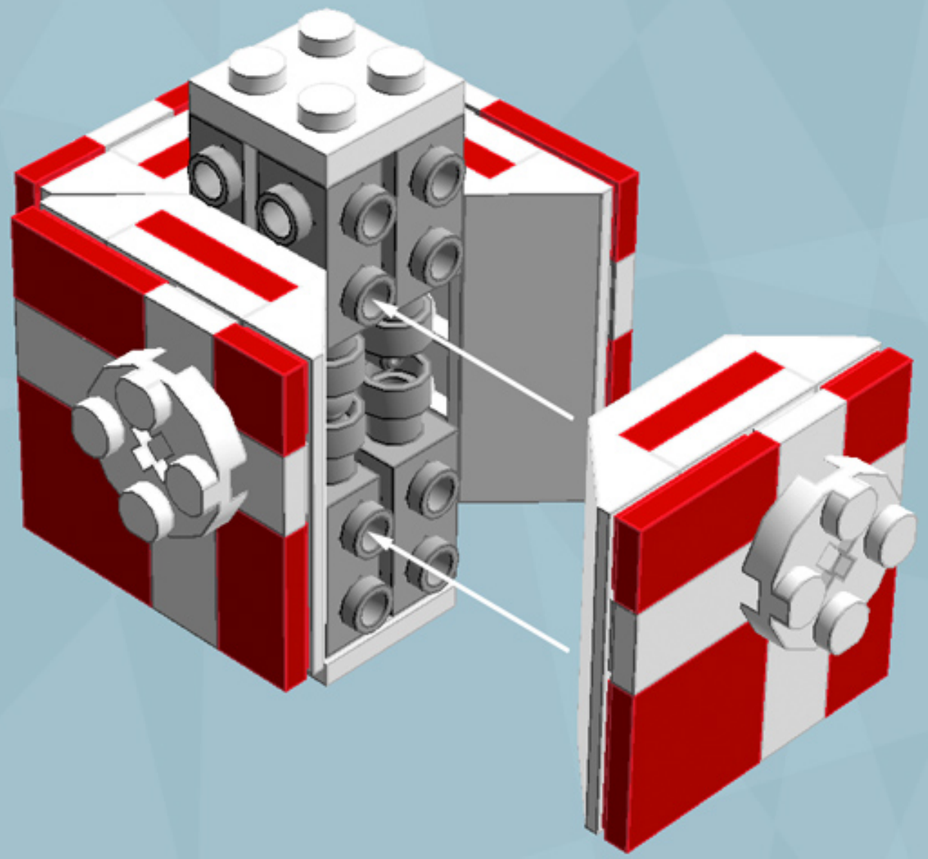

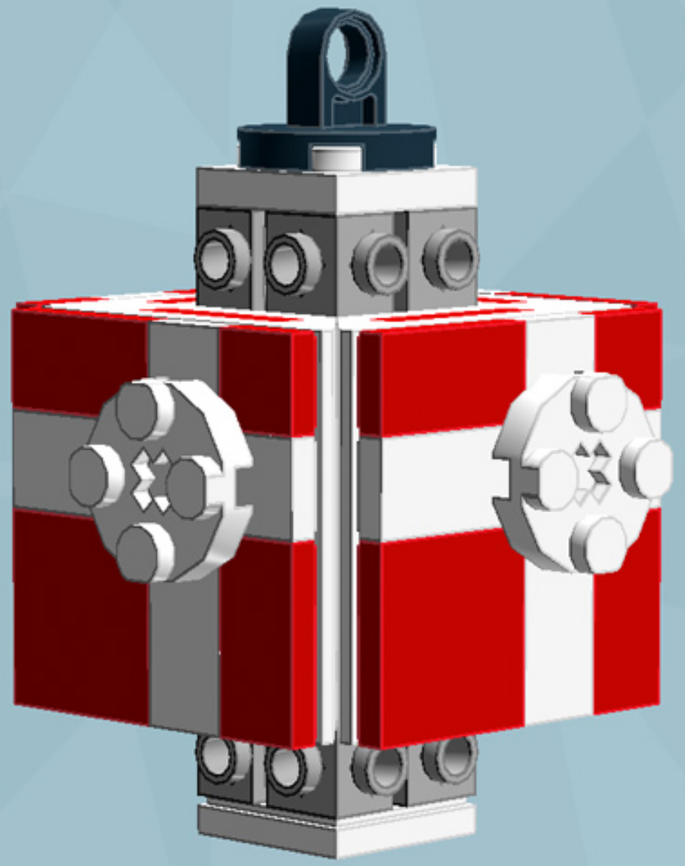

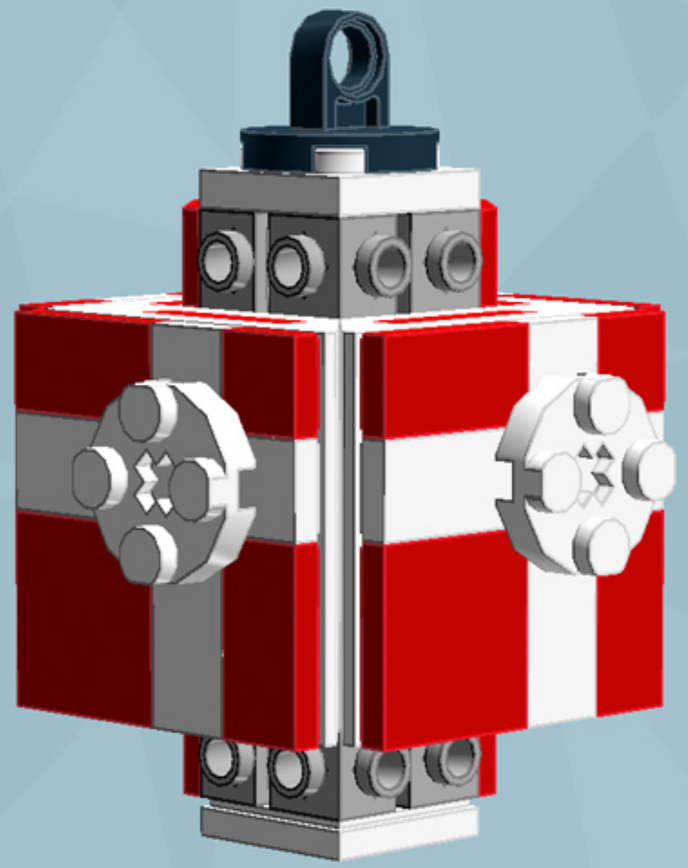

For more fun builds,
please pop by chrismcveigh.com,
visit me at facebook.com/c.mcveigh.photos,
or follow me on twitter @actionfigured

Purchase custom building kits at powerpig.storenvy.com

These building guides are for personal use only. Unauthorized duplication, distribution and/or modification of these guides, in whole or in part, is strictly prohibited. The models contained within these guides are the copyright of Chris McVeigh, unless otherwise stated. Unauthorized reproduction of these models for resale, either in whole or as a building kit, is strictly prohibited.
© 2014 CHRIS MCVEIGH

LEGO is a registered trademark of The LEGO Group.